COPYRIGHT © Hangzhou EZVIZ Software Co., Ltd.. ALL RIGHTS RESERVED.
Any and all information, including, among others, wordings, pictures, graphs are the properties of Hangzhou EZVIZ Software Co., Ltd. (hereinafter referred to as “EZVIZ”). This user manual (hereinafter referred to as “the Manual”) cannot be reproduced, changed, translated, or distributed, partially or wholly, by any means, without the prior written permission of EZVIZ. Unless otherwise stipulated, EZVIZ does not make any warranties, guarantees or representations, express or implied, regarding to the Manual.

**About this Manual**

The Manual includes instructions for using and managing the product. Pictures, charts, images and all other information hereinafter are for description and explanation only. The information contained in the Manual is subject to change, without notice, due to firmware updates or other reasons. Please find the latest version in the EZVIZ ™ website (http://www.ezviz.com).

**Revision Record**

New release – January, 2023

**Trademarks Acknowledgement**

EZVIZ ™, ™, and other EZVIZ’s trademarks and logos are the properties of EZVIZ in various jurisdictions. Other trademarks and logos mentioned below are the properties of their respective owners.

**Legal Disclaimer**

TO THE MAXIMUM EXTENT PERMITTED BY APPLICABLE LAW, THE PRODUCT DESCRIBED, WITH ITS HARDWARE, SOFTWARE AND FIRMWARE, IS PROVIDED “AS IS”, WITH ALL FAULTS AND ERRORS, AND EZVIZ MAKES NO WARRANTIES, EXPRESS OR IMPLIED, INCLUDING WITHOUT LIMITATION, MERCHANTABILITY, SATISFACTORY QUALITY, FITNESS FOR A PARTICULAR PURPOSE, AND NON-INFRINGEMENT OF THIRD PARTY. IN NO EVENT WILL EZVIZ, ITS DIRECTORS, OFFICERS, EMPLOYEES, OR AGENTS BE LIABLE TO YOU FOR ANY SPECIAL, CONSEQUENTIAL, INCIDENTAL, OR INDIRECT DAMAGES, INCLUDING, AMONG OTHERS, DAMAGES FOR LOSS OF BUSINESS PROFITS, BUSINESS INTERRUPTION, OR LOSS OF DATA OR DOCUMENTATION, IN CONNECTION WITH THE USE OF THIS PRODUCT, EVEN IF EZVIZ HAS BEEN ADVISED OF THE POSSIBILITY OF SUCH DAMAGES.

TO THE MAXIMUM EXTENT PERMITTED BY APPLICABLE LAW, IN NO EVENT SHALL EZVIZ’S TOTAL LIABILITY FOR ALL DAMAGES EXCEED THE ORIGINAL PURCHASE PRICE OF THE PRODUCT.

EZVIZ DOES NOT UNDERTAKE ANY LIABILITY FOR PERSONAL INJURY OR PROPERTY DAMAGE AS THE RESULT OF PRODUCT INTERRUPTION OR SERVICE TERMINATION CAUSED BY: A) IMPROPER INSTALLATION OR USAGE OTHER THAN AS REQUESTED; B) THE PROTECTION OF NATIONAL OR PUBLIC INTERESTS; C) FORCE MAJEURE; D) YOURSELF OR THE THIRD PARTY, INCLUDING WITHOUT LIMITATION, USING ANY THIRD PARTY’S PRODUCTS, SOFTWARE, APPLICATIONS, AND AMONG OTHERS.

REGARDING TO THE PRODUCT WITH INTERNET ACCESS, THE USE OF PRODUCT SHALL BE WHOLLY AT YOUR OWN RISKS. EZVIZ SHALL NOT TAKE ANY RESPONSIBILITES FOR ABNORMAL OPERATION, PRIVACY LEAKAGE OR OTHER DAMAGES RESULTING FROM CYBER ATTACK, HACKER ATTACK, VIRUS INSPECTION, OR OTHER INTERNET SECURITY RISKS; HOWEVER, EZVIZ WILL PROVIDE TIMELY TECHNICAL SUPPORT IF REQUIRED. SURVEILLANCE LAWS AND DATA PROTECTION LAWS VARY BY JURISDICTION. PLEASE CHECK ALL RELEVANT LAWS IN YOUR JURISDICTION BEFORE USING THIS PRODUCT IN ORDER TO ENSURE THAT YOUR USE CONFORMS TO THE APPLICABLE LAW. EZVIZ SHALL NOT BE LIABLE IN THE EVENT THAT THIS PRODUCT IS USED WITH ILLEGITIMATE PURPOSES.

IN THE EVENT OF ANY CONFLICTS BETWEEN THE ABOVE AND THE APPLICABLE LAW, THE LATTER PREVAILS.

# Table of Contents


Overview ..... 1
1. Package Contents ..... 1
2. Basics ..... 1

Setup ..... 2
1. Get the EZVIZ App ..... 2
2. Power-on ..... 3
3. Connect to the Internet ..... 3

Installation ..... 4
1. Installation Location ..... 4
2. Install the Micro SD Card (Optional) ..... 4
3. Install the Base ..... 4
4. Install the Camera ..... 5

View Your Device ..... 6
1. Live View ..... 6
2. Settings ..... 7

EZVIZ Connect ..... 8
1. Use Amazon Alexa ..... 8
2. Use Google Assistant ..... 8

FAQ ..... 9

Initiatives on the Use of Video Products ..... 11

INFORMATION FOR PRIVATE HOUSEHOLDS ..... 12

# Overview

## 1. Package Contents



Camera (x1)



Power Adapter (x1)



Power Cable (x1)




Drill Template (x1)



Mounting Plate (x1)



Screw Kit (x1)



Regulatory Information (x1)



Quick Start Guide (x1)

The power adapter's appearance is subject to the actual one you have bought.

## 2. Basics






| Name | Description |
|---|---|
| LED Indicator | Solid Red: Camera starting up. |
| | Slow-flashing Red: Network exception. |
| | Fast-flashing Red: Camera exception (e.g. Micro SD card error). |
| | Solid Blue: Video being viewed in the EZVIZ app. |
| | Fast-flashing Blue: Camera ready for network connection. |
| | Slow-Flashing Blue: Camera running properly. |
| Micro SD Card (sold separately) | Initialize the card in the EZVIZ app before using it.<br>Recommended compatibility: Class 10, maximum space 512GB. |
| RESET Button | Press and hold for 4 seconds to restart and set all parameters to default. |
| Power Port | For powering on the camera. |
| Call Button | Press the button once to start a call, and the EZVIZ app will receive the call request. |

# Setup

**Follow the steps to set your camera:**

1. Get the EZVIZ app, and log in to your EZVIZ app account.
2. Power on your camera.
3. Add your camera to your EZVIZ account.

## 1. Get the EZVIZ App

1. Connect your mobile phone to Wi-Fi (suggested).
2. Download and install the EZVIZ app by searching "EZVIZ" in the App Store or Google Play™.
3. Launch the app and register an EZVIZ user account.

| EZVIZ App | |
|---|---|
| Download on the App Store | GET IT ON Google Play |

If you have already used the app, please make sure that it is the latest version. To find out if an update is available, go to the app store and search for EZVIZ.

## 2. Connect to the Internet

- Wired Connection: Connect the camera to a router. Refer to **Option A**.
- Wireless Connection: Connect the camera to Wi-Fi. Refer to **Option B**.

### 2.1 Option A: Wired Connection

1. Connect the power adapter cable to the camera's power port.
2. Plug the power adapter into a power outlet.

When the LED indicator flashes blue quickly, indicates that the camera is ready for network confguration

3. Connect the camera to the LAN port of your router with the Ethernet cable (purchase separately).

When the LED indicator turns slow-flashing blue, indicates that the camera has connected to the Internet.

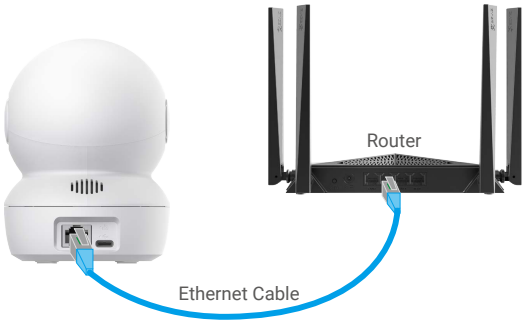


4. Log in to your account using the EZVIZ app.
5. On the Home screen, tap "+" on the upper-right corner to go to the Scan QR Code interface.
6. Scan the QR code on the Quick Start Guide cover or on the body of the camera.

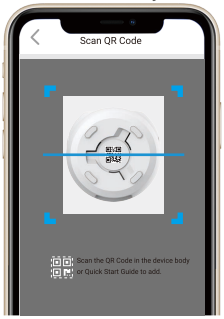


7. Follow the EZVIZ app wizard to add the camera to your EZVIZ app account.

- It is recommended to use the power cable and power adapter included in the package.
- When the LED indicator flashes blue quickly, indicates that the camera is ready for network configuration.

### 2.2 Option B: Wireless Connection

1. Connect the power adapter cable to the camera's power port.
2. Plug the power adapter into a power outlet.

When the LED indicator flashes blue quickly, indicates that the camera is ready for network confguration




3. Add your camera to EZVIZ.
   - Log in to your account using the EZVIZ App.
   - On the Home screen, tap "+" on the upper-right corner to go to the Scan QR Code interface.
   - Scan the QR code on the Quick Start Guide cover or on the body of the camera.




4. Follow the EZVIZ app wizard to finish Wi-Fi configuration and add the camera to your EZVIZ app account.

   - If the camera fails to connect to your Wi-Fi, press and hold the reset button for about 4s to restart the camera and repeat the steps above.
   - If you want to connect the camera to another Wi-Fi, go to Settings > Network Settings in EZVIZ app to change the Wi-Fi.

# Installation

## 1. Installation Location

Choose a location with a clear, unblocked field of view and with a good wireless signal to the camera. Please keep the following tips in mind:

- Remove the protective film from the lens.
- Make sure the wall is strong enough to withstand three times the weight of the camera.
- It is recommended to set detection sensitivity on EZVIZ app when selecting location. Thus you can verify if motion can be detected in the camera's placement and adjust the sensitivity based on the size and distance of detected object.

## 2. Install the Micro SD Card (Optional)

- Rotate the sphere upwards until you see the card slot.
- Insert the Micro SD card (sold separately) into the card slot as shown in the figure below.




## 3. Install the Base

The camera can be placed horizontally or mounted on the ceiling. Here we take ceiling mounting as an example.

- Please install the device indoor as the device is not waterproof.
- Make sure the ceiling is strong enough to withstand three times the weight of the camera.
- Avoid positioning the camera in an area that gets a lot of light shining directly into the camera lens.
- Recommended mounting height: 3 meters above the ground.

- Place the drill template onto the surface you have chosen to mount the camera.
- (For cement wall/ceiling only) Drill screw holes according to the template, and insert three anchors.
- Use three metal screws to fix the camera base.

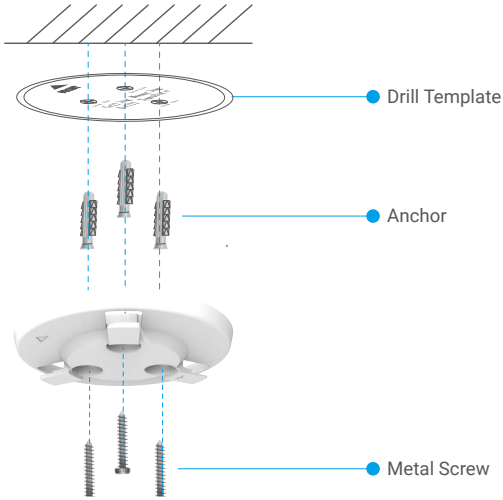

## 4. Install the Camera

Mount the camera to the base, and turn it clockwise until it is fixed.



# View Your Device

The app interface may change due to version update. Please refer to the actual interface.

## 1. Live View

When you launch the EZVIZ app, the device page displays as shown below.

You can view and listen to a live feed, take snapshots or recordings, and choose video definition as needed.

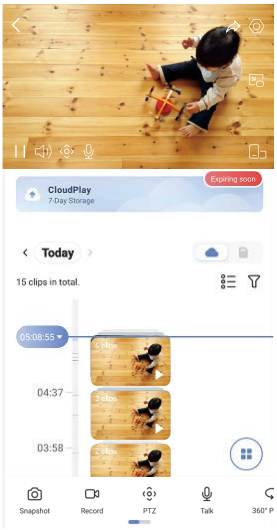


Swipe left and right across the screen to see more icons.

| Icon | Description |
|---|---|
| | Share. Share your device with anyone you want. |
| | Settings. View or change the device settings. |
| | Popup. View the video displayed on top of another app you are using. |
| | Snapshot. Take a snapshot. |
| | Record. Manually start/stop recording. |
| | PTZ. Rotate the camera to get broader field of view.<br>Preset Location. Control the PTZ to set the monitoring site as preset locations. |
| | 360° Picture. Tap to generate a 360 degree view picture. |
| | Talk. Tap the icon, and then follow the on-screen instructions to talk to or listen to people in front of the camera. |
| | Sleep Mode. Tap to enter sleep mode, the video will stop displaying and the alarm notification will be turned off. |
| | Definition. Select video resolution as you needed. |
| | Nearby Device. Tap to check available devices nearby. |

## 2. Settings

In the settings page, you can set the parameters of the device.

| Parameter | Description |
|---|---|
| Name | Customize the name of your device. |
| Intelligent Detection | You can select between different detection types for your device. |
| Notification | You can manage the device message and EZVIZ app notification. |
| Audio Settings | You can set relevant audio parameters for your device. |
| Image Settings | You can set relevant image parameters for your device. |
| Light Settings | When disabled, the camera indicator will be off. |
| PTZ Settings | You can set parameters of PTZ for your device, like PTZ position calibration and 360° Picture here. |
| CloudPlay | You can subscribe and manage the cloud storage.<br>• The function is only available in certain countries. Please verify the availability in your conutry before purchasing.<br>• The producer reserves the right of final explanation. |
| Record List | You can see micro SD card capacity, and also you can enable or disable cloud storage service here. |
| Device Inspection | You can subscribe the device inspection here. |
| Security Settings | You can encrypt your videos with encryption password and customize the privacy area. |
| Network Settings | You can see the connection status. |
| Device Information | You can see the device information here. |
| Share Device | You can share the device to you family members or guests. |
| Restart Device | Tap to restart the device. |
| Delete Device | Tap to delete the device from EZVIZ app. |

# EZVIZ Connect

## 1. Use Amazon Alexa

These instructions will enable you to control your EZVIZ devices with Amazon Alexa. If you run into any difficulties during the process, please refer to **Troubleshooting**.

### Before you start, make sure that:

1. EZVIZ devices are connected to the EZVIZ app.
2. In the EZVIZ app, turn off the "Image Encryption" in the Device Settings page.
3. You have an Alexa-enabled device (i.e Echo Spot, Echo-Show, All-new Echo-Show, Fire TV (all generations), Fire TV stick (second generation only), or Fire TV Edition smart TVs).
4. The Amazon Alexa app is already installed on your smart device, and you have created an account.

### To Control EZVIZ devices with Amazon Alexa:

1. Open the Alexa app and select "Skills and Games" from the menu.
2. On the Skills and Games screen, search for "EZVIZ", and you will find "EZVIZ" skills.
3. Select your EZVIZ device's skill, then tap **ENABLE TO USE**.
4. Enter your EZVIZ username and password, and tap **Sign in**.
5. Tap the **Authorize** button to authorize Alexa to access your EZVIZ account, so that Alexa can control your EZVIZ devices.
6. You will see "EZVIZ has been successfully linked", then tap **DISCOVER DEVICES** to allow Alexa to discover all your EZVIZ devices.
7. Go back to Alexa app menu and select "Devices", and under devices you will see all your EZVIZ devices.

### Voice Command

Discover a new smart device via the "Smart Home" menu in the Alexa app or the Alexa Voice Control function.

Once the device is found, you can control it with your voice. Speak simple commands to Alexa.

Your device's name for example: "show xxxx camera," can be modified in the EZVIZ app. Every time you change the name of the device, you will need to discover the device again to update the name.

### Troubleshooting

What do I do if Alexa fails to discover my device?

Check if there are any Internet connecting problems.

Try to reboot the smart device and re-discover the device on Alexa.

Why does the device's status show "Offline" on Alexa?

Your wireless connection might have been disconnected. Reboot the smart device and re-discover on Alexa.

Internet access on your router could be unavailable. Check if your router is connected to the Internet and try again.

For details about countries that support the using of Amazon Alexa, see its official website.

## 2. Use Google Assistant

With the Google Assistant, you can activate your EZVIZ device and watch live by speaking Google Assistant voice commands.

### The following devices and apps are required:

1. A functional EZVIZ app.
2. In the EZVIZ app, turn off the "Image Encryption" and turn on the "Audio" in the Device Settings page.
3. A TV with functional Chromecast connecting to it.
4. The Google Assistant app on your phone.

### To get started, follow the steps below:

1. Set up the EZVIZ device and make sure it works properly on the app.
2. Download the Google Home app from the App Store or Google Play Store™ and log into your Google account.
3. On the Myhome screen, tap "+" on the upper-left corner, and select "Set up device" from the menu list to go to the Set up interface.
4. Tap **Works with Google**, and search for "EZVIZ", where you will find "EZVIZ" skills.
5. Enter your EZVIZ username and password, and tap **Sign in**.

6. Tap the **Authorize** button to authorize Google to access your EZVIZ account, so that Google can control your EZVIZ devices.
7. Tap **Return to app**.
8. Follow the above steps to complete the authorization. When synchronization is completed, EZVIZ service will be listed under your list of services. To see a list of compatible devices under your EZVIZ account, tap on the EZVIZ service icon.
9. Now try some commands. Use the name of the camera that you created when you set up the system.

Users can manage devices as a single entity or in a group. Adding devices to a room allows users to control a group of devices at the same time using one command.

See the link for more information:

*https://support.google.com/googlehome/answer/7029485?co=GENIE.Platform%3DAndroid&hl=en*

# FAQ

**Q: If the camera is offline, will the video recording be continued?**

A: If the camera is powered on but disconnect to the Internet, then video recording on micro SD card will continue but cloud recording will stop. If the camera is powered off, both video recordings will stop.

**Q: Why the alarm is triggered when nobody in the image?**

A: Try to set the alarm sensitivity lower. Please notice that vehicle and animals are also the trigger source.

**Q: What if I forget my password?**

A: Please go to the EZVIZ app > login page, tap on “Forgot password?” > Enter your account’s email address or phone number. (Send)> Input the verification code > RESET your password.

**Q: Why can't I receive my verification code?**

A:

1. If you registered the account via email, please check your junk mail.
   If still haven't received the verification code, you might have email filter/block restricting this email, please check with your email provider.

2. If you registered an account via mobile number, please confirm whether your mobile can receive SMS short codes or not.
3. If you still haven't received the verification code, please provide your number, your country, time of request to the support center at support@ezviz.com or contact your regional support team.

**Q: How to solve Wi-Fi configuration failed?**

A: Please check the following settings:

1. Ensure that your mobile phone is connected to the Wi-Fi and the Wi-Fi network is working properly.
2. Check the network condition:

- Make sure your network has no firewall or other limits.
- Ensure the router can distribute IP address to your device or disable the static IP setting (DHCP is enabled by default on all EZVIZ devices).

3. RESET your camera; ensure that your device is in ready mode or Wi-Fi configuration mode > then use the EZVIZ app for device Wi-Fi configuration.

**Q: How to get the device verification code (6 capital letters)?**

A: Please note that for most EZVIZ devices, usually there are two ways to get the 6 capital letters device verification code:

- For most of the models, You can find it on the device sticker/label of the EZVIZ device;
- Alternatively, you can also find the verification code in camera Settings > Device Information > Verification Code.

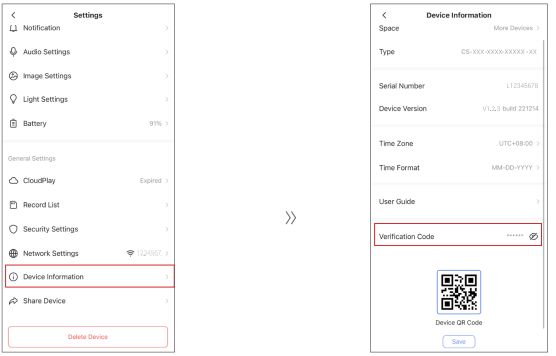


For additional information about the device, please refer to www.ezviz.com.

# Initiatives on the Use of Video Products

Dear Valued EZVIZ Users,

Technology affects every aspect of our life. As a forward-looking tech company, we are increasingly aware of the role technology plays in improving efficiency and quality of our life. At the same time, we are also aware of the potential harm of its improper usage. For example, video products can record real, complete and clear images, therefore they hold great values in representing facts. Nevertheless, improper distribution, use and/or processing of video records may infringe on the privacy, legitimate rights and interests of others.

Committed to innovating technology for the good, we at EZVIZ hereby earnestly advocate that every user shall use video products properly and responsibly, thus to collectively create a positive environment where all related practices and usage comply with applicable laws and regulations, respect individuals' interests and rights, and promote social morality.

Here are EZVIZ's initiatives that we'd appreciate your attention:

1. Each individual possesses a reasonable expectation of privacy, and the use of video products should not be in conflict with such reasonable expectation. Therefore, a warning notice which clarifies the monitoring range should be displayed in a reasonable and effective manner, when installing video products in public areas. For non-public areas, the rights and interests of people involved shall be evaluated thoughtfully, including but not limited to, installing video products only after obtaining the consent of the stakeholders, and not installing highly-invisible video products without other's knowledge.

2. Video products objectively records footage of real activities within specific time and space. Users shall reasonably identify the people and rights involved in this scope in advance, to avoid any infringement of portrait, privacy or other legal rights of others while protecting themselves through video products. Notably, if you choose to enable the audio recording function on your camera, it will capture sounds, including conversations, within the monitoring range. We highly recommend a comprehensive assessment on the potential sound sources in the monitoring range, so as to fully understand the necessity and the reasonableness before you turn on the audio recording function.

3. Video products in use will consistently generate audio or visual data from real scenes –possibly including biometric information such as facial images – based on the user's selection of product features. Such data can be used or processed to use. Video products are only technological tools that do not and cannot humanly practice legal and moral standards to guide lawful and proper use of data. It is the methods and purposes of the people who control and use the generated data that make a difference. Therefore, data controllers shall not only strictly abide by applicable laws and regulations, but also fully respect non-obligatory rules including international conventions, moral standards, cultural norms, public order and local customs. Furthermore, we should always prioritize the protection of privacy and portrait rights, and other reasonable interests.

4. The video data continuously generated by video products carries the rights, values and other demands of various stakeholders. Thus, it is extremely crucial to ensure data security and shield the products from malicious intrusions. Every user and data controller shall, undertake all reasonable and necessary measures to maximize product and data security, avoiding data leakage, improper disclosure or misuse, including but not limited to, setting up access control, selecting a suitable network environment where video products are connected, establishing and constantly optimizing network security.

5. Video products have made great contributions to enhance the safety of our society, and we believe that they will continue to play a positive role in various aspects of our daily life. Any attempt to abuse these products to violate human rights or engage in unlawful activities contradicts the very essence of the value in tech innovation and product development. We encourage every user to establish your own methods and rules to evaluate and monitor the use of video products, so as to ensure that these products are always used properly, thoughtfully and with goodwill.

## INFORMATION FOR PRIVATE HOUSEHOLDS

1. Separate collection of waste equipment: Electrical and electronic equipment that has become waste is referred to as waste equipment. Owners of waste equipment must dispose of it separately from unsorted municipal waste. In particular, waste equipment does not belong in household waste, but in special collection and return systems.
2. Batteries and rechargeable batteries as well as lamps: Owners of waste equipment shall, as a rule, separate waste batteries and rechargeable batteries that are not enclosed in the waste equipment, which can be removed from the waste equipment without being destroyed, from the waste equipment before handing them in at a collection point. This does not apply if waste equipment is prepared for reuse with the participation of a public waste management authority.
3. Options for returning waste equipment: Owners of waste equipment from private households can return it free of charge to the collection points of the public waste management authorities or to the take-back points set up by manufacturers or distributors within the meaning of the Electrical and Electronics Equipment Law. Stores with a sales area of at least 400 m² for electrical and electronic equipment and those grocery stores with a total sales area of at least 800 m² that offer electrical and electronic equipment several times a year or on a permanent basis and make it available in the market are required to take it back. This also applies in the case of distribution using means of distance communication, if the storage and shipping areas for electrical and electronic equipment are at least 400 m² or the total storage and shipping areas are at least 800 m². Distributors shall, in principle, ensure take-back by providing suitable return facilities at a reasonable distance from the respective end user. The possibility of returning waste equipment free of charge exists for distributors who are obliged to take it back, among other things, if a new similar device that essentially fulfills the same functions is delivered to an end user.
4. Privacy Notice: Waste equipment often contains sensitive personal data. This applies in particular to devices of information and telecommunications technology such as computers and smartphones. In your own interest, please note that each end user is responsible for deleting the data on the waste equipment to be disposed of.
5. Meaning of the symbol “crossed-out wheelie bin”: The symbol of a crossed-out wheelie bin regularly depicted on electrical and electronic equipment indicates that the respective device is to be collected separately from unsorted municipal waste at the end of its service life.